Ship 7th
OC

Work Order ID 74254

Tuesday, September 27, 2011 1:53:11 PM

Item ID: D4272-014 **Accept** **Setup Start** **Stop**

Revision ID:

Item Name: Basket Assembly, Lightweight Lid, RH

Start Date: 9/27/2011 **Start Qty:** 1.00 **Cust Item ID:**

Required Date: 10/7/2011 **Req'd Qty:** 1.00 **Customer:**

Reference:

Approvals: **Process Plan:** MF **Date:** 11-09-27 **Tooling:** _____ **Date:** _____ **Run Start** **Stop**

QC: _____ **Date:** _____ **SPC (Y/N):** _____ **Date:** _____

Sequence ID/ Work Center ID	Operation Description	Set Up/ Run Hours	Tool ID	Tool #	Plan Code	Accept Qty	Reject Qty	Reject Number	Insp. Stamp
Draw Nbr	**Revision Nbr**								
D4272	C								
100	Pick Kit	0.00							
Packaging	**Memo**	0.00				SP	11-10-5		
Packaging									
110	Assemble as per dwg	0.00							
HandFinish	**Memo**	0.00					11/10/11		
Hand Finishing	****Mask label plate to size of D4307 label, use scotchbrite red pad to lightly sand area for label, apply label ****								
120	QC5- Inspect part completeness to step on W/O	0.00							
QC	**Memo**	0.00	5 w/10/11			EL			
Quality Control									

Dart Aerospace Ltd

W/O:		WORK ORDER CHANGES					
DATE	STEP	PROCEDURE CHANGE	By	Date	Qty	Approval Chief Eng / Prod Mgr	Approval QC Inspector

Part No: _____ **PAR #:** _____ **Fault Category:** _____ **NCR:** Yes No **DQA:** _____ **Date:** _____

Resolution: _____ **Disposition:** _____ **QA: N/C Closed:** _____ **Date:** _____

NCR:		WORK ORDER NON-CONFORMANCE (NCR)						
DATE	STEP	Description of NC Section A	Corrective Action Section B			Verification Section C	Approval Chief Eng	Approval QC Inspector
			Initial Chief Eng	Action Description Chief Eng	Sign & Date			

NOTE: Date & initial all entries

H:\fFORMS\Quality Assurance\approved QA\NCRWO RevE

Work Order ID 74254

Tuesday, September 27, 2011 1:53:11 PM

Item ID: D4272-014 **Accept** **Setup** **Start**

Revision ID: **Stop**

Item Name: Basket Assembly, Lightweight Lid, RH

Start Date: 9/27/2011 **Start Qty:** 1.00 **Cust Item ID:**

Required Date: 10/7/2011 **Req'd Qty:** 1.00 **Customer:**

Reference:

Approvals: **Process Plan:** _____ **Date:** _____ **Tooling:** _____ **Date:** _____ **Run** **Start**

QC: _____ **Date:** _____ **SPC (Y/N):** _____ **Date:** _____ **Stop**

Sequence ID/ Work Center ID	Operation Description	Set Up/ Run Hours	Tool ID	Tool #	Plan Code	Accept Qty	Reject Qty	Reject Number	Insp. Stamp
130	Identify as per dwg & Stock Location:_____	0.00	74253			11/10/11			
Packaging	**Memo**	0.00							
Packaging									
140	QC21- Final Inspection - Work Order Release	0.00						11/10/12	
QC	**Memo**	0.00							
Quality Control									

11-10-11

Dart Aerospace Ltd

W/O:		WORK ORDER CHANGES					
DATE	STEP	PROCEDURE CHANGE	By	Date	Qty	Approval Chief Eng / Prod Mgr	Approval QC Inspector

Part No: _____ **PAR #:** _____ **Fault Category:** _____ **NCR:** Yes No **DQA:** _____ **Date:** _____

Resolution: _____ **Disposition:** _____ **QA: N/C Closed:** _____ **Date:** _____

NCR:		WORK ORDER NON-CONFORMANCE (NCR)						
DATE	STEP	Description of NC Section A	Corrective Action Section B			Verification Section C	Approval Chief Eng	Approval QC Inspector
			Initial Chief Eng	Action Description Chief Eng	Sign & Date			

NOTE: Date & initial all entries

H:\fFORMS\Quality Assurance\approved QA\NCRWO RevE

Picklist Print

Tuesday, September 27, 2011 1:53:04 PM

Work Order ID: 74254

Parent Item: D4272-014

Parent Item Name: Basket Assembly, Lightweight Lid, RH

Start Date: 9/27/2011 **Required Date:** 10/7/2011

Start Qty: 1.00 **Required Qty:** 1.00

Comments: IPP Rev:A 11.01.20 AS PER DWG REV.C DD verf:EC IPP Rev:B
11.04.15 added D4307-265 DD verf:EC

Component Item ID/ Item Name	Replacement Item ID	Mfg/ Purch	Bin Item	Primary Location	Last Location	Route Seq ID	Unit of Measure	Qty on Hand	Qty per Kit	Total Qty	Qty Issued	Date Issued	Status
D4273-042		Manufactured	No			100	Each	0.0000	1	1			
Basket Base Assembly, RH						B 74271					11/10/11		
D4307-265		Manufactured	No			100	Each	5.0000	1	1			
Placard, Max Load													
				Location			**Loc Qty**		**Loc Code**				
				ST139			5						
					66327		5			IV			
D2530		Manufactured	No			100	Each	11.0000	1	1			
Handle Weldment													
				Location			**Loc Qty**		**Loc Code**				
				ST506			10						
					72166		4			IX			
					73450		6						
				ST508			1						
					69318		1						
D2535		Manufactured	No			100	Each	73.0000	2	2			
Spring											11-10-5		
				Location			**Loc Qty**		**Loc Code**				
				ST504			73						
					71117		73			2X			

Dart Aerospace Ltd

W/O:		WORK ORDER CHANGES					
DATE	STEP	PROCEDURE CHANGE	By	Date	Qty	Approval Chief Eng / Prod Mgr	Approval QC Inspector

Part No: _____ **PAR #:** _____ **Fault Category:** _____ **NCR:** Yes No **DQA:** _____ **Date:** _____

Resolution: _____ **Disposition:** _____ **QA: N/C Closed:** _____ **Date:** _____

NCR:		WORK ORDER NON-CONFORMANCE (NCR)						
DATE	STEP	Description of NC Section A	Corrective Action Section B			Verification Section C	Approval Chief Eng	Approval QC Inspector
			Initial Chief Eng	Action Description Chief Eng	Sign & Date			

NOTE: Date & initial all entries

H:\fFORMS\Quality Assurance\approved QA\NCRWO RevE

Picklist Print

Tuesday, September 27, 2011 1:53:04 PM

Work Order ID: 74254

Parent Item: D4272-014

Parent Item Name: Basket Assembly, Lightweight Lid, RH

Start Date: 9/27/2011 **Required Date:** 10/7/2011

Start Qty: 1.00 **Required Qty:** 1.00

D2537	Manufactured	No	100	Each	47.0000	2	2	SP
Bushing								

Location	Loc Qty	Loc Code	
ST504	47		
~~71853~~	17		2x
73344	30		

D2690-6	Manufactured	No	100	Each	16.0000	2	2	SP
Lanyard Assembly								

Location	Loc Qty	Loc Code	
ST020	16		
70920	4		2x
73324	12		

D2931	Manufactured	No	100	Each	580.0000	2	2	SP
Bumper								

Location	Loc Qty	Loc Code	
ST504	580		
46064	580		2x

D3912-041	Manufactured	No	100	Each	0.0000	1	1	SP B742661x
Eyebolt Receiver Assembly								
D3915-041	Manufactured	No	100	Each	0.0000	1	1	11/10/11
Light Lid Assemby, Long Basket			74257		(1x)			

Dart Aerospace Ltd

W/O:		WORK ORDER CHANGES					
DATE	STEP	PROCEDURE CHANGE	By	Date	Qty	Approval Chief Eng / Prod Mgr	Approval QC Inspector

Part No: _____ **PAR #:** _____ **Fault Category:** _____ **NCR:** Yes No **DQA:** _____ **Date:** _____

Resolution: _____ **Disposition:** _____ **QA: N/C Closed:** _____ **Date:** _____

NCR:		WORK ORDER NON-CONFORMANCE (NCR)						
DATE	STEP	Description of NC Section A	Corrective Action Section B			Verification Section C	Approval Chief Eng	Approval QC Inspector
			Initial Chief Eng	Action Description Chief Eng	Sign & Date			

NOTE: Date & initial all entries

H:\fFORMS\Quality Assurance\approved QA\NCRWO RevE

Picklist Print

Tuesday, September 27, 2011 1:53:05 PM

Work Order ID: 74254

Parent Item: D4272-014

Parent Item Name: Basket Assembly, Lightweight Lid, RH

Start Date: 9/27/2011 **Required Date:** 10/7/2011

Start Qty: 1.00 **Required Qty:** 1.00

D3917-3	Manufactured	No		100	Each	35.0000	6	6
Washer								

Location	Loc Qty	Loc Code
ST092	35	
73332	35	

D3953-3	Manufactured	No		100	Each	3.0000	2	2
Gas Spring Stud, Lid								

B 74644

Location	Loc Qty	Loc Code
ST096	3	
71875	3	

D3953-7	Manufactured	No	–	100	Each	4.0000	2	2
Spring Spacer								

Location	Loc Qty	Loc Code
ST096	4	
65053	4	

D3953-9	Manufactured	No		100	Each	4.0000	2	2
Gas Spring Washer								

Location	Loc Qty	Loc Code
ST096	4	
69025	4	

D3953-17	Manufactured	No		100	Each	23.0000	2	2
Gas Spring Spacer								

Location	Loc Qty	Loc Code
ST096	23	
73474	23	

Dart Aerospace Ltd

W/O:		WORK ORDER CHANGES					
DATE	STEP	PROCEDURE CHANGE	By	Date	Qty	Approval Chief Eng / Prod Mgr	Approval QC Inspector

Part No: _____ **PAR #:** _____ **Fault Category:** _____ **NCR:** Yes No **DQA:** _____ **Date:** _____

Resolution: _____ **Disposition:** _____ **QA: N/C Closed:** _____ **Date:** _____

NCR:		WORK ORDER NON-CONFORMANCE (NCR)						
DATE	STEP	Description of NC Section A	Corrective Action Section B			Verification Section C	Approval Chief Eng	Approval QC Inspector
			Initial Chief Eng	Action Description Chief Eng	Sign & Date			

NOTE: Date & initial all entries

H:\fFORMS\Quality Assurance\approved QA\NCRWO RevE

Picklist Print

Tuesday, September 27, 2011 1:53:06 PM

Work Order ID: 74254

Parent Item: D4272-014

Parent Item Name: Basket Assembly, Lightweight Lid, RH

Start Date: 9/27/2011 **Required Date:** 10/7/2011

Start Qty: 1.00 **Required Qty:** 1.00

D3953-19	Manufactured	No	100	Each	11.0000	1	1	SP
Gas Spring Bracket								

Location	Loc Qty	Loc Code	
ST096	11		
59213	1		
73551	10		IX

D3953-21	Manufactured	No	100	Each	17.0000	1	1	SP
Gas Spring Bracket								

Location	Loc Qty	Loc Code	
ST096	17		
73557	17		IX

D3969-3	Manufactured	No	100	Each	31.0000	1	1	~~B-13515~~ SP -
Spring (Basket Lid)								

Location	Loc Qty	Loc Code	
ST272	31		
64285	1		
73515	30		IX

D4021-5	Manufactured	No	100	Each	36.0000	1	1	SP 11-10-5
Blanking Plate								

Location	Loc Qty	Loc Code	
GA	36		
73478	36		IX

Dart Aerospace Ltd

W/O:		WORK ORDER CHANGES					
DATE	STEP	PROCEDURE CHANGE	By	Date	Qty	Approval Chief Eng / Prod Mgr	Approval QC Inspector

Part No: _____ **PAR #:** _____ **Fault Category:** _____ **NCR:** Yes No **DQA:** _____ **Date:** _____

Resolution: _____ **Disposition:** _____ **QA: N/C Closed:** _____ **Date:** _____

NCR:		WORK ORDER NON-CONFORMANCE (NCR)						
DATE	STEP	Description of NC Section A	Corrective Action Section B			Verification Section C	Approval Chief Eng	Approval QC Inspector
			Initial Chief Eng	Action Description Chief Eng	Sign & Date			

NOTE: Date & initial all entries

H:\fFORMS\Quality Assurance\approved QA\NCRWO RevE

Picklist Print

Tuesday, September 27, 2011 1:53:06 PM

Work Order ID: 74254

Parent Item: D4272-014

Parent Item Name: Basket Assembly, Lightweight Lid, RH

Start Date: 9/27/2011 **Required Date:** 10/7/2011

Start Qty: 1.00 **Required Qty:** 1.00

D4150-041 Attachment Arm Assembly	Manufactured	No	100	Each	3.0000	1	1 SP	
		Location	**Loc Qty**	**Loc Code**				
		GA	3					
		71157	3				1x	
D4151-041 Basket Fwd Hardpoint Assembly, Lower	Manufactured	No	100	Each	0.0000	1	1 B73547 1x SP	
D4151-043 Basket Fwd Hardpoint Assembly, Upper	Manufactured	No	100	Each	1.0000	1	1 SP	
		Location	**Loc Qty**	**Loc Code**				
		ST134	1					
		73908	1				1x	
AN3-10A Bolt	Purchased	No	100	Each	72.0000	3	3 SP	
		Location	**Loc Qty**	**Loc Code**				
		ST351	72					
		117795	72				3x	
AN3-14A Bolt	Purchased	No	100	Each	64.0000	4	4 SP 11-10-5	
		Location	**Loc Qty**	**Loc Code**				
		ST352	64					
		117872	64				4x	

Dart Aerospace Ltd

W/O:		WORK ORDER CHANGES					
DATE	STEP	PROCEDURE CHANGE	By	Date	Qty	Approval Chief Eng / Prod Mgr	Approval QC Inspector

Part No: _____ **PAR #:** _____ **Fault Category:** _____ **NCR:** Yes No **DQA:** _____ **Date:** _____

Resolution: _____ **Disposition:** _____ **QA: N/C Closed:** _____ **Date:** _____

NCR:		WORK ORDER NON-CONFORMANCE (NCR)						
DATE	STEP	Description of NC Section A	Corrective Action Section B			Verification Section C	Approval Chief Eng	Approval QC Inspector
			Initial Chief Eng	Action Description Chief Eng	Sign & Date			

NOTE: Date & initial all entries

H:\fFORMS\Quality Assurance\approved QA\NCRWO RevE

Picklist Print

Tuesday, September 27, 2011 1:53:07 PM

Work Order ID: 74254

Parent Item: D4272-014

Parent Item Name: Basket Assembly, Lightweight Lid, RH

Start Date: 9/27/2011 **Required Date:** 10/7/2011

Start Qty: 1.00 **Required Qty:** 1.00

AN3-20A Bolt	Purchased	No	100	Each	128.0000	2	2	SP

Location	Loc Qty	Loc Code	
ST352	128		
115371	28		2x
117441	100		

AN4-12 Bolt	Purchased	No	100	Each	62.0000	3	3	SP

Location	Loc Qty	Loc Code	
ST357	62		
117514	12		3x
118626	50		

AN4-13A Bolt	Purchased	No	100	Each	1,510.000	6	6	SP

Location	Loc Qty	Loc Code	
ST357	1510		
118078	594		
118706	416		6x
118838	500		

AN4C15 BOLT	Purchased	No	100	Each	19.0000	1	1	SP 11-10-5

Location	Loc Qty	Loc Code	
ST358	19		
118091	4		1
118652	15		

Dart Aerospace Ltd

W/O:		WORK ORDER CHANGES					
DATE	STEP	PROCEDURE CHANGE	By	Date	Qty	Approval Chief Eng / Prod Mgr	Approval QC Inspector

Part No: _____ **PAR #:** _____ **Fault Category:** _____ **NCR:** Yes No **DQA:** _____ **Date:** _____

Resolution: _____ **Disposition:** _____ **QA: N/C Closed:** _____ **Date:** _____

NCR:		WORK ORDER NON-CONFORMANCE (NCR)						
DATE	STEP	Description of NC Section A	Corrective Action Section B			Verification Section C	Approval Chief Eng	Approval QC Inspector
			Initial Chief Eng	Action Description Chief Eng	Sign & Date			

NOTE: Date & initial all entries

H:\fFORMS\Quality Assurance\approved QA\NCRWO RevE

Picklist Print

Tuesday, September 27, 2011 1:53:07 PM

Work Order ID: 74254

Parent Item: D4272-014

Parent Item Name: Basket Assembly, Lightweight Lid, RH

Start Date: 9/27/2011 **Required Date:** 10/7/2011

Start Qty: 1.00 **Required Qty:** 1.00

AN5-17A Bolt	Purchased	No	100	Each	86.0000	2	2	SP

Location	Loc Qty	Loc Code
ST339	86	
117872	44	
118706	42	2x

AN5-21A Bolt	Purchased	No	100	Each	34.0000	2	2	SP

Location	Loc Qty	Loc Code
ST339	34	
114714	34	2x

AN310-4 NUT	Purchased	No	100	Each	29.0000	3	3	m119084 SP

Location	Loc Qty	Loc Code
ST324	29	
118112	4	
118983	25	

AN310C4 Nut	Purchased	No	100	Each	41.0000	3	3	SP 11-10-5

Location	Loc Qty	Loc Code
ST324	41	
116741	4	
117395	7	3x
118090	10	
118626	20	

Dart Aerospace Ltd

W/O:		WORK ORDER CHANGES					
DATE	STEP	PROCEDURE CHANGE	By	Date	Qty	Approval Chief Eng / Prod Mgr	Approval QC Inspector

Part No: _____ **PAR #:** _____ **Fault Category:** _____ **NCR:** Yes No **DQA:** _____ **Date:** _____

Resolution: _____ **Disposition:** _____ **QA: N/C Closed:** _____ **Date:** _____

NCR:		WORK ORDER NON-CONFORMANCE (NCR)						
DATE	STEP	Description of NC Section A	Corrective Action Section B			Verification Section C	Approval Chief Eng	Approval QC Inspector
			Initial Chief Eng	Action Description Chief Eng	Sign & Date			

NOTE: Date & initial all entries

H:\fFORMS\Quality Assurance\approved QA\NCRWO RevE

Picklist Print

Tuesday, September 27, 2011 1:53:07 PM

Work Order ID: 74254

Parent Item: D4272-014

Parent Item Name: Basket Assembly, Lightweight Lid, RH

Start Date: 9/27/2011 **Required Date:** 10/7/2011

Start Qty: 1.00 **Required Qty:** 1.00

MS20600-AD4W3	Purchased	No	100	Each	1,459.000	2	2	SP

Cherry Rivets

Location		Loc Qty	Loc Code	
GA		922		
	118626	922		2x
ST321		404		
	111636	48		
	117505	321		
	117601	35		
WA018		133		
	107939	133		

MS21042L3	Purchased	No	100	Each	8,399.000	9	9	SP 11-10-5

Nut

Location		Loc Qty	Loc Code	
ST300		2399		
	117441	16		
	117601	240		
	117885	143		
	118451	1000		9x
	118927	1000		
ST516		6000		
	119017	6000		

Dart Aerospace Ltd

W/O:		WORK ORDER CHANGES					
DATE	STEP	PROCEDURE CHANGE	By	Date	Qty	Approval Chief Eng / Prod Mgr	Approval QC Inspector

Part No: _____ **PAR #:** _____ **Fault Category:** _____ **NCR:** Yes No **DQA:** _____ **Date:** _____

Resolution: _____ **Disposition:** _____ **QA: N/C Closed:** _____ **Date:** _____

NCR:		WORK ORDER NON-CONFORMANCE (NCR)						
DATE	STEP	Description of NC Section A	Corrective Action Section B			Verification Section C	Approval Chief Eng	Approval QC Inspector
			Initial Chief Eng	Action Description Chief Eng	Sign & Date			

NOTE: Date & initial all entries

H:\fFORMS\Quality Assurance\approved QA\NCRWO RevE

Picklist Print

Tuesday, September 27, 2011 1:53:07 PM

Work Order ID: 74254

Parent Item: D4272-014

Parent Item Name: Basket Assembly, Lightweight Lid, RH

Start Date: 9/27/2011 **Required Date:** 10/7/2011

Start Qty: 1.00 **Required Qty:** 1.00

MS21042L4	Purchased	No	100	Each	9,965.000	6	6	SP

Nut

Location	Loc Qty	Loc Code	
ST300	3965		
117441	51		
117601	637		
117885	277		Cox
118451	2000		
118927	1000		
ST516	6000		
119017	6000		

MS21042L5	Purchased	No	100	Each	1,206.000	4	4	SP

Nut

Location	Loc Qty	Loc Code	
ST300	1206		
116105	5		
116548	53		
117441	262		4K
117611	90		
118179	496		
118910	300		

MS24665-151	Purchased	No	100	Each	405.0000	4	4	SP 11-10-5

Cotter Pin

Location	Loc Qty	Loc Code	
ST309	405		
17566	405		4K

Dart Aerospace Ltd

W/O:		WORK ORDER CHANGES					
DATE	STEP	PROCEDURE CHANGE	By	Date	Qty	Approval Chief Eng / Prod Mgr	Approval QC Inspector

Part No: _____ **PAR #:** _____ **Fault Category:** _____ **NCR:** Yes No **DQA:** _____ **Date:** _____

Resolution: _____ **Disposition:** _____ **QA: N/C Closed:** _____ **Date:** _____

NCR:		WORK ORDER NON-CONFORMANCE (NCR)						
DATE	STEP	Description of NC Section A	Corrective Action Section B			Verification Section C	Approval Chief Eng	Approval QC Inspector
			Initial Chief Eng	Action Description Chief Eng	Sign & Date			

NOTE: Date & initial all entries

H:\FORMS\Quality Assurance\approved QA\NCRWO RevE

Picklist Print

Tuesday, September 27, 2011 1:53:07 PM

Work Order ID: 74254

Parent Item: D4272-014

Parent Item Name: Basket Assembly, Lightweight Lid, RH

Start Date: 9/27/2011 **Required Date:** 10/7/2011

Start Qty: 1.00 **Required Qty:** 1.00

MS24665-300	Purchased	No	100	Each	242.0000	2	2	SP

Cotter Pin

Location		Loc Qty	Loc Code	
GA		200		
	118234	200		
ST309		42		
	116823	42		2x

NAS1149DN832J	Purchased	No	100	Each	1,184.000	2	2	SP

WASHER

Location		Loc Qty	Loc Code	
ST297		1184		
	~~117887~~	184		2x
	118614	1000		

NAS1149F0332P	Purchased	No	100	Each	102.0000	14	14	SP

WASHER

Location		Loc Qty	Loc Code	
ST275		102		
	~~117735~~	63		14x
	~~118354~~	36		
	17317	3		

NAS1149C0432R	Purchased	No	100	Each	4,118.000	2	2	SP 11-10-5

Washer

Location		Loc Qty	Loc Code	
ST297		4118		
	117291	4118		2x

Dart Aerospace Ltd

W/O:		WORK ORDER CHANGES					
DATE	STEP	PROCEDURE CHANGE	By	Date	Qty	Approval Chief Eng / Prod Mgr	Approval QC Inspector

Part No: _____ **PAR #:** _____ **Fault Category:** _____ **NCR:** Yes No **DQA:** _____ **Date:** _____

Resolution: _____ **Disposition:** _____ **QA: N/C Closed:** _____ **Date:** _____

NCR:		WORK ORDER NON-CONFORMANCE (NCR)						
DATE	STEP	Description of NC Section A	Corrective Action Section B			Verification Section C	Approval Chief Eng	Approval QC Inspector
			Initial Chief Eng	Action Description Chief Eng	Sign & Date			

NOTE: Date & initial all entries

H:\fFORMS\Quality Assurance\approved QA\NCRWO RevE

Picklist Print

Tuesday, September 27, 2011 1:53:07 PM

Work Order ID: 74254

Parent Item: D4272-014

Parent Item Name: Basket Assembly, Lightweight Lid, RH

Start Date: 9/27/2011 **Required Date:** 10/7/2011

Start Qty: 1.00 **Required Qty:** 1.00

NAS1149F0432P Washer	Purchased	No	100	Each	144.0000	18	18	SP

Location		Loc Qty	Loc Code
ST275		144	
	118840	144	

18x

NAS1149C0463R Washer	Purchased	No	100	Each	489.0000	3	3	SP

Location		Loc Qty	Loc Code
FP-B		1	
	115358	1	
ST297		488	
	117735	488	

3x

NAS1149F0563P Washer	Purchased	No	100	Each	163.0000	4	4	SP

Location		Loc Qty	Loc Code
ST297		163	
	117735	163	

4x

NAS1515H4L WASHER	Purchased	No	100	Each	378.0000	2	2	SP 11-10-5

Location		Loc Qty	Loc Code
FG		12	
	103691	12	
ST277		366	
	118709	366	

2x

Dart Aerospace Ltd

W/O:		WORK ORDER CHANGES					
DATE	STEP	PROCEDURE CHANGE	By	Date	Qty	Approval Chief Eng / Prod Mgr	Approval QC Inspector

Part No: _____ **PAR #:** _____ **Fault Category:** _____ **NCR:** Yes No **DQA:** _____ **Date:** _____

Resolution: _____ **Disposition:** _____ **QA: N/C Closed:** _____ **Date:** _____

NCR:		WORK ORDER NON-CONFORMANCE (NCR)						
DATE	STEP	Description of NC Section A	Corrective Action Section B			Verification Section C	Approval Chief Eng	Approval QC Inspector
			Initial Chief Eng	Action Description Chief Eng	Sign & Date			

NOTE: Date & initial all entries

H:\fFORMS\Quality Assurance\approved QA\NCRWO RevE

Picklist Print

Tuesday, September 27, 2011 1:53:07 PM

Work Order ID: 74254

Parent Item: D4272-014

Parent Item Name: Basket Assembly, Lightweight Lid, RH

Start Date: 9/27/2011 **Required Date:** 10/7/2011

Start Qty: 1.00 **Required Qty:** 1.00

MS17984-C413	Purchased	No	100	Each	11.0000	2	2	SP 11-10-5
PIN, QUICK RELEASE								

Location	Loc Qty	Loc Code
ST315	11	
114340	1	
118612	10	2x

Dart Aerospace Ltd

W/O:		WORK ORDER CHANGES					
DATE	STEP	PROCEDURE CHANGE	By	Date	Qty	Approval Chief Eng / Prod Mgr	Approval QC Inspector

Part No: _____ **PAR #:** _____ **Fault Category:** _____ **NCR:** Yes No **DQA:** _____ **Date:** _____

Resolution: _____ **Disposition:** _____ **QA: N/C Closed:** _____ **Date:** _____

NCR:		WORK ORDER NON-CONFORMANCE (NCR)						
DATE	STEP	Description of NC Section A	Corrective Action Section B			Verification Section C	Approval Chief Eng	Approval QC Inspector
			Initial Chief Eng	Action Description Chief Eng	Sign & Date			

NOTE: Date & initial all entries

H:\fFORMS\Quality Assurance\approved QA\NCRWO RevE

ITEM	QTY -011	QTY -012	QTY -013	QTY -014	PART NUMBER	DESCRIPTION
	X				D4272-011	BASKET ASSY, HEAVY DUTY LID, LH
		X			D4272-012	BASKET ASSY, HEAVY DUTY LID, RH
			X		D4272-013	BASKET ASSY, LIGHTWEIGHT LID, LH
				X	D4272-014	BASKET ASSY, LIGHTWEIGHT LID, RH
1	1	1	1	1	D2530	HANDLE WELDMENT
2	2	2	2	2	D2535	SPRING
3	2	2	2	2	D2537	BUSHING
4	2	2	2	2	D2690-6	LANYARD
5	2	2	2	2	D2931	BUMPER
6	1	1	1	1	D3912-041	EYEBOLT RECEIVER ASSY
7	1	1			D3914-041	BASKET LID ASSY
8			1	1	D3915-041	LIGHT LID ASSY
9	6	6	6	6	D3917-3	WASHER
10	2	2	2	2	D3953-3	GAS SPRING STUD, LID
11	2	2	2	2	D3953-7	GAS SPRING SPACER
12	2	2	2	2	D3953-8	GAS SPRING WASHER
13	2	2	2	2	D3953-17	GAS SPRING SPACER
14	1	1	1	1	D3953-19	GAS SPRING BRACKET
15	1	1	1	1	D3953-21	GAS SPRING BRACKET
16	1	1	1	1	D3969-3	GAS SPRING
17	1	1	1	1	D4021-5	BLANKING PLATE
18	1	1	1	1	D4150-041	ATTACHMENT ARM ASSY
19	1	1	1	1	D4151-041	BASKET HARDPOINT ASSY (LOWER)
20	1	1	1	1	D4151-043	BASKET HARDPOINT ASSY (UPPER)
21	1		1		D4273-041	BASKET BASE ASSY, LH
22		1		1	D4273-042	BASKET BASE ASSY, RH
24	3	3	3	3	AN3-10A	BOLT
26	4	4	4	4	AN3-14A	BOLT
27	2	2			AN3-16A	BOLT
28			2	2	AN3-20A	BOLT
29	3	3	3	3	AN4-12	BOLT
30	6	6	6	6	AN4-13A	BOLT
31	1	1	1	1	AN4C15	BOLT
32	4	4	2	2	AN5-17A	BOLT
33			2	2	AN5-21A	BOLT
34	3	3	3	3	AN310-4	NUT, CASTELLATED
35	3	3	3	3	AN310C4	NUT, CASTELLATED
36	2	2	2	2	MS17984-C413	QUICK RELEASE PIN
37	2	2	2	2	MS20600AD4W3	RIVET
38	9	9	9	9	MS21042L3	NUT
39	6	6	6	6	MS21042L4	NUT
40	4	4	4	4	MS21042L5	NUT
41	4	4	4	4	MS24665-151	COTTER PIN
42	2	2	2	2	MS24665-300	COTTER PIN
43	2	2	2	2	NAS1149DN832J	WASHER (ALT: AN960JD8)
44	14	14	14	14	NAS1149F0332P	WASHER
45	2	2	2	2	NAS1149C0432R	WASHER
46	18	18	18	18	NAS1149F0432P	WASHER
47	3	3	3	3	NAS1149C0463R	WASHER
48	4	4	4	4	NAS1149F0563P	WASHER
49	2	2	2	2	NAS1515H4L	WASHER

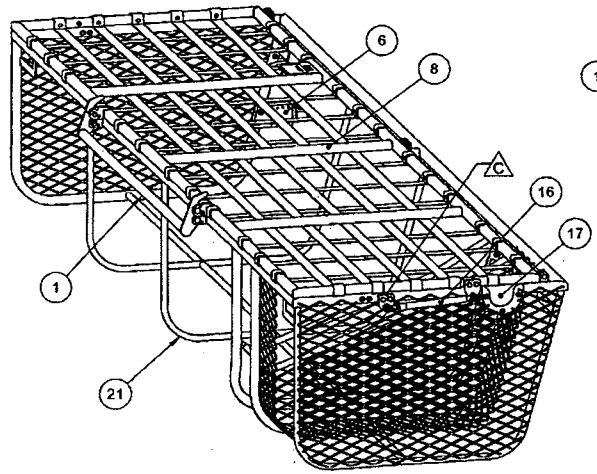

D4272-013 BASKET ASSY, LIGHTWEIGHT LID, LH (SHOWN)
D4272-014 BASKET ASSY, LIGHTWEIGHT LID, RH (OPPOSITE)
(MESH SHOWN LOCALLY FOR CLARITY)

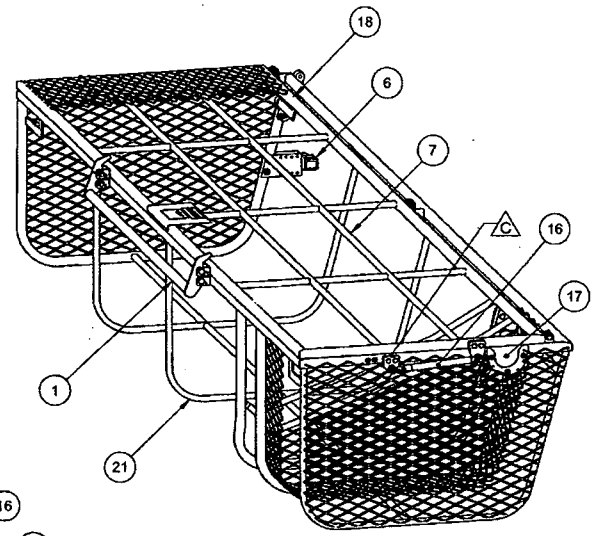

D4272-011 BASKET ASSY, HEAVY DUTY LID, LH (SHOWN)
D4272-012 BASKET ASSY, HEAVY DUTY LID, RH (OPPOSITE)
(MESH SHOWN LOCALLY FOR CLARITY)

74254

RELEASED
2011 -01- 18

NOTES:
1) MATERIAL: N/A
2) FINISH: NONE
3) TOLERANCES: PER DART QSI 018 UNLESS OTHERWISE NOTED
4) UNITS: INCHES UNLESS OTHERWISE NOTED
5) BREAK SHARP EDGES: N/A
6) IDENTIFICATION: N/A
7) WEIGHT: -011/-012: 73 lbs APPROX
-013/-014: 58 lbs APPROX

REV.	DESCRIPTION	BY	DATE
C	UPDATED D4273-041/-042 BASKET BASE ASSY; CHANGED LOCATION OF GAS SPRING MOUNTING BRACKET; UPDATED SECTION F-F	SC	10.12.23
B	RMV ITEM 23,25 (WEDGE); ITEM 38 QTY(-2), ITEM 44 QTY (-4) (B6-1), RMV D2537 FROM SECTION C-C (TYPO, D3-3)	CP	10.11.30
A	NEW ISSUE	SC	10.11.25

DESIGN	JPH	DART AEROSPACE LTD HAWKESBURY, ONTARIO, CANADA
DRAWN	SC	
CHECKED		DRAWING NO. D4272 — REV. C — SHEET 1 OF 3
MFG. APPR.		
APPROVED		TITLE: BASKET ASSY — SCALE: NTS
DE APPR.		
DATE	10.12.23	

COPYRIGHT © 2010 BY DART AEROSPACE LTD
THIS DOCUMENT IS PRIVATE AND CONFIDENTIAL AND IS SUPPLIED ON THE EXPRESS CONDITION THAT IT IS NOT TO BE USED FOR ANY PURPOSE OR COPIED OR COMMUNICATED TO ANY OTHER PERSON WITHOUT WRITTEN PERMISSION FROM DART AEROSPACE LTD.

Dart Aerospace Ltd

W/O:		WORK ORDER CHANGES					
DATE	STEP	PROCEDURE CHANGE	By	Date	Qty	Approval Chief Eng / Prod Mgr	Approval QC Inspector

Part No: _____ **PAR #:** _____ **Fault Category:** _____ **NCR:** Yes No **DQA:** _____ **Date:** _____

Resolution: _____ **Disposition:** _____ **QA: N/C Closed:** _____ **Date:** _____

NCR:		WORK ORDER NON-CONFORMANCE (NCR)						
DATE	STEP	Description of NC Section A	Corrective Action Section B			Verification Section C	Approval Chief Eng	Approval QC Inspector
			Initial Chief Eng	Action Description Chief Eng	Sign & Date			

NOTE: Date & initial all entries

H:\fFORMS\Quality Assurance\approved QA\NCRWO RevE

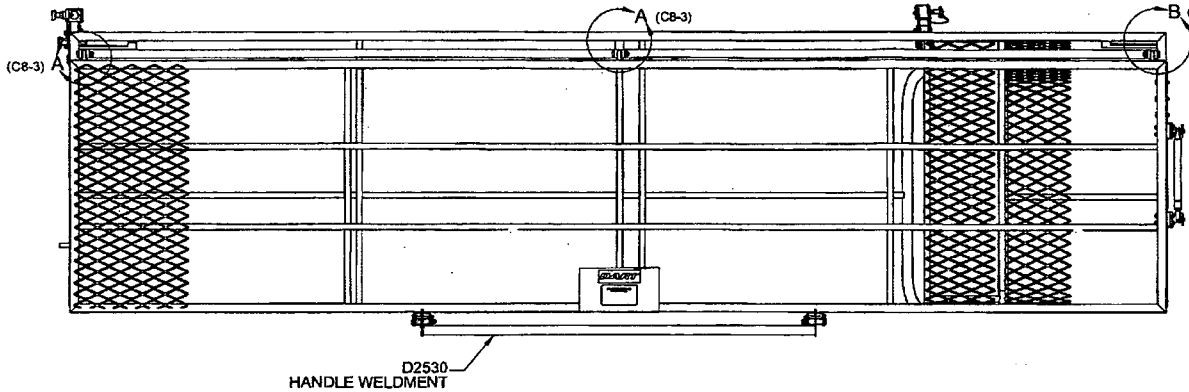

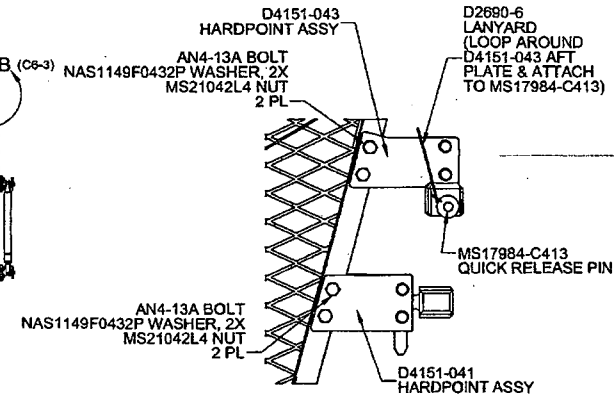

SECTION F-F (B4-2)

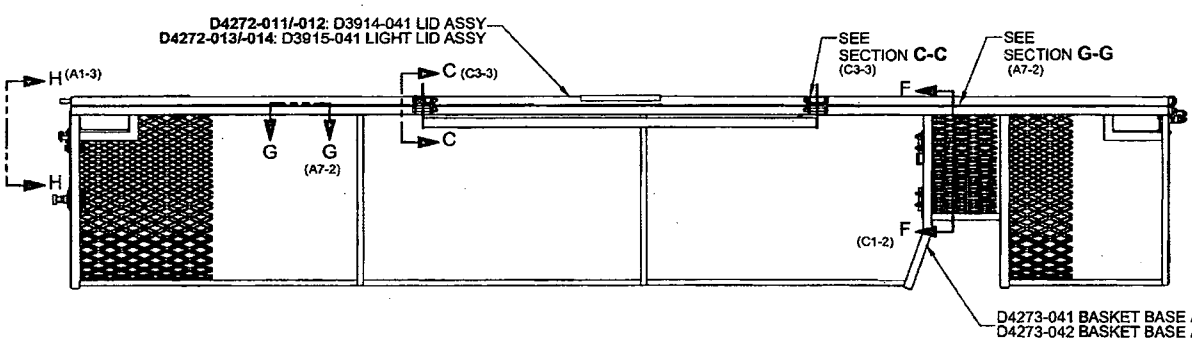

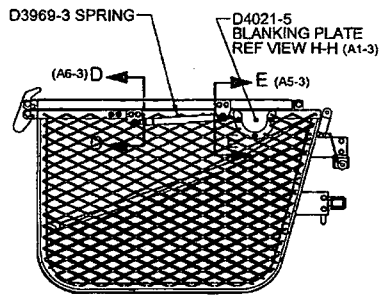

74254

RELEASED
2011 -01- 18

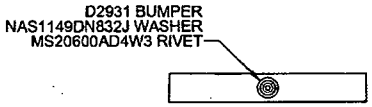

SECTION G-G (B4-2) (B7-2)
(LID ASSY REMOVED FOR CLARITY)

D4272-011 BASKET ASSY, HEAVYDUTY LID, LH (SHOWN)
D4272-012 BASKET ASSY, HEAVYDUTY LID, RH (OPPOSITE)
D4272-013/-014 BASKET ASSY, LIGHTWEIGHT LID (SIMILAR)
(MESH SHOWN LOCALLY OR REMOVED FOR CLARITY)

DESIGN	JPH	**DART AEROSPACE LTD** HAWKESBURY, ONTARIO, CANADA
DRAWN	SC	
CHECKED		DRAWING NO. D4272 — REV. C — SHEET 2 OF 3
MFG. APPR.		
APPROVED		TITLE: BASKET ASSY — SCALE: NTS
DE APPR.		
DATE	10.12.23	

COPYRIGHT © 2010 BY DART AEROSPACE LTD
THIS DOCUMENT IS PRIVATE AND CONFIDENTIAL AND IS SUPPLIED ON THE EXPRESS CONDITION THAT IT IS NOT TO BE USED FOR ANY PURPOSE, OR COPIED OR COMMUNICATED TO ANY OTHER PERSON WITHOUT WRITTEN PERMISSION FROM DART AEROSPACE LTD.

Dart Aerospace Ltd

W/O:		WORK ORDER CHANGES					
DATE	STEP	PROCEDURE CHANGE	By	Date	Qty	Approval Chief Eng / Prod Mgr	Approval QC Inspector

Part No: _____ **PAR #:** _____ **Fault Category:** _____ **NCR:** Yes No **DQA:** _____ **Date:** _____

Resolution: _____ **Disposition:** _____ **QA: N/C Closed:** _____ **Date:** _____

NCR:		WORK ORDER NON-CONFORMANCE (NCR)						
DATE	STEP	Description of NC Section A	Corrective Action Section B			Verification Section C	Approval Chief Eng	Approval QC Inspector
			Initial Chief Eng	Action Description Chief Eng	Sign & Date			

NOTE: Date & initial all entries

H:\fFORMS\Quality Assurance\approved QA\NCRWO RevE

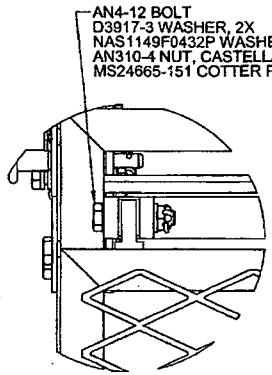

DETAIL A (D8-2) (D6-2)

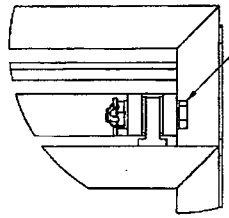

DETAIL B (D3-2)

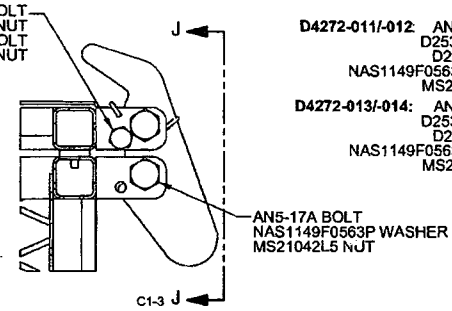

SECTION C-C (B5-2) (B7-2)

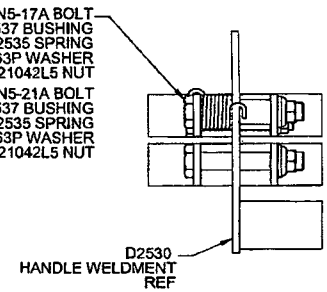

VIEW J-J C3-3

74254

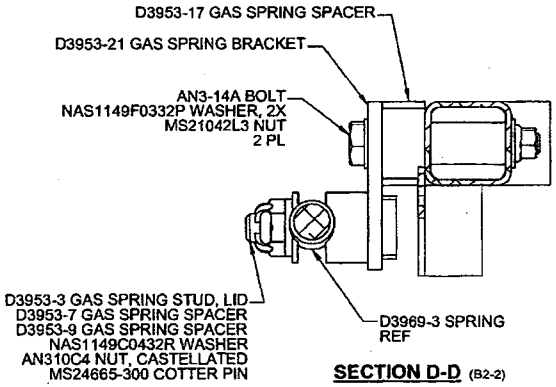

SECTION D-D (B2-2)

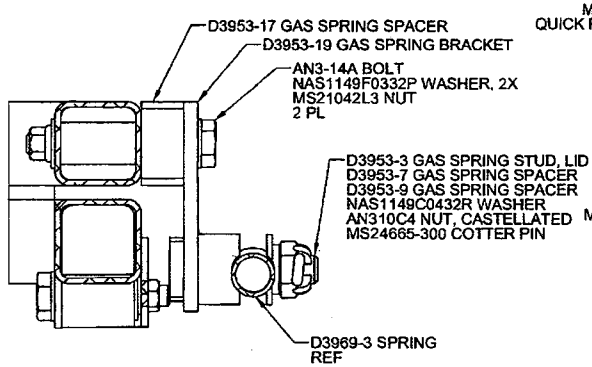

SECTION E-E (B1-2)

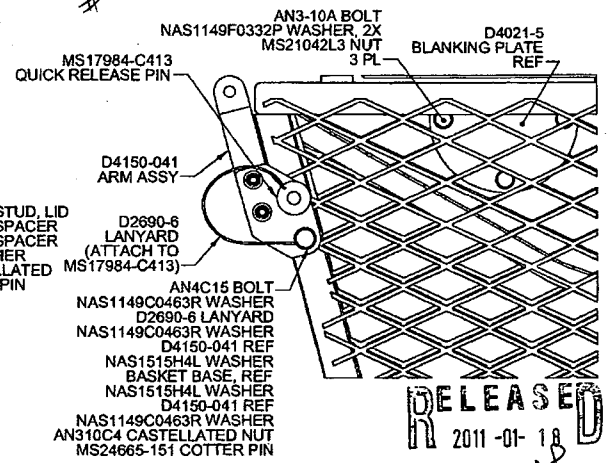

RELEASED
2011 -01- 18

VIEW H-H (B8-2)

DESIGN	JPH	**DART AEROSPACE LTD** HAWKESBURY, ONTARIO, CANADA
DRAWN	SC	
CHECKED		DRAWING NO. D4272 — REV. C — SHEET 3 OF 3
MFG. APPR.		
APPROVED		TITLE: BASKET ASSY — SCALE: NTS
DE APPR.		
DATE	10.12.23	

COPYRIGHT © 2010 BY DART AEROSPACE LTD
THIS DOCUMENT IS PRIVATE AND CONFIDENTIAL AND IS SUPPLIED ON THE EXPRESS CONDITION THAT IT IS NOT TO BE USED FOR ANY PURPOSE OR COPIED OR COMMUNICATED TO ANY OTHER PERSON WITHOUT WRITTEN PERMISSION FROM DART AEROSPACE LTD.

Dart Aerospace Ltd

W/O:		WORK ORDER CHANGES					
DATE	STEP	PROCEDURE CHANGE	By	Date	Qty	Approval Chief Eng / Prod Mgr	Approval QC Inspector

Part No: _____ **PAR #:** _____ **Fault Category:** _____ **NCR:** Yes No **DQA:** _____ **Date:** _____

Resolution: _____ **Disposition:** _____ **QA: N/C Closed:** _____ **Date:** _____

NCR:		WORK ORDER NON-CONFORMANCE (NCR)						
DATE	STEP	Description of NC Section A	Corrective Action Section B			Verification Section C	Approval Chief Eng	Approval QC Inspector
			Initial Chief Eng	Action Description Chief Eng	Sign & Date			

NOTE: Date & initial all entries

H:\fFORMS\Quality Assurance\approved QA\NCRWO RevE